PRACTICE EXERCISES

Problem 1

Following is a network of connecting states (S-A-D-B-E-C-F-G) with cost values (distance from one node to the other) is given. Assume "S" is the start and "G" is the goal state. Use search tree by tracing out all possible paths until you cannot extend any of them without creating a loop. Expand using depth first and breath first search. Compare which strategy is better and gives an optimal solution

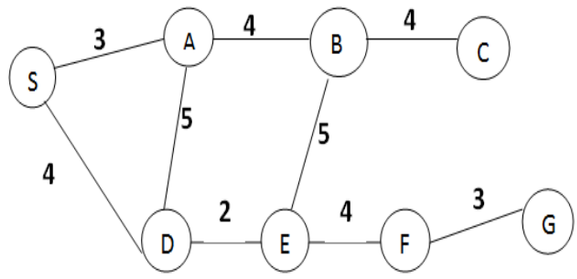

Problem 2

Consider the following game tree in which the root corresponds to a MAX node and the values of a static evaluation function, if applied, are given at the leaves.

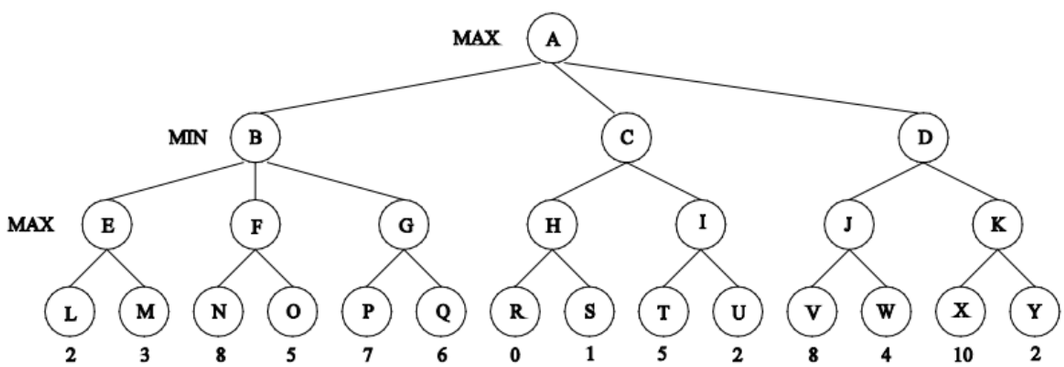

i. What are the minimax values computed at each node in this game tree? Write your answers to the LEFT of each node in the tree above.

ii. Which nodes are not examined when Alpha-Beta Pruning is performed? Assume children are visited left to right.

Problem 3

Consider a vocabulary with the following symbols:

Occupation(p, o): Predicate. Person p has occupation o.
Customer (p1, p2): Predicate. Person p1 is a customer of person p2.
Boss(p1, p2): Predicate. Person p1 is a boss of person p2.
Doctor , Surgeon, Lawyer , Actor : Constants denoting occupations.
Emily, Joe: Constants denoting people.

i. Use these symbols to write the following assertions in first-order logic:

ii. Emily is either a surgeon or a lawyer.

iii. All surgeons are doctors.

iv. There exists a lawyer all of whose customers are doctors.

v. Every surgeon has a lawyer.

1. Use the A* algorithm on the graph below to find a path from node S to node G. • Each node is labeled by a capital letter and the value of a heuristic function at that node. • Each edge is labeled by the cost to traverse that edge.

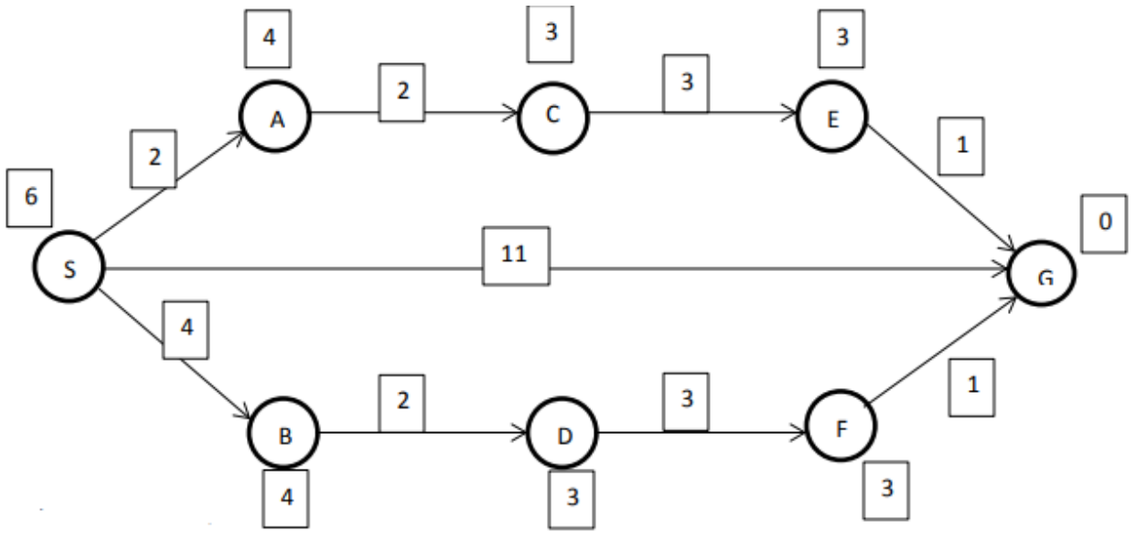

Problem 4

Let these propositional symbols have the following meaning:

symbol	*meaning*
A	The patient was in an accident
S	The patient is sick
I	The patient is injured
D	The patient needs to see a doctor

Express each of the following English sentences in propositional logic using the symbols ∧, ∨, ¬ , → and ↔ for the logical connectives and, or, not and implies and 'if and only if'.

i. The patient was in a car accident, but is not injured
ii. The patient needs to see a doctor if he is sick or injured
iii. If the patient was not in an accident and is not sick, then he does not need to see a doctor

Problem 5

Consider the following maze. There are 11 possible positions, numbered 1 through 11. The agent starts in the position marked S (position number 3). From any position, there are from one to four possible moves, depending on position: Left, Right, Up, and/or Down. The agent's goal is to find the shortest path that will touch both of the goals (G1 and G2).

1	2 G_1	3 S	4
5		6 G_2	7
8	9	10	11

i. Define a notation for the state of this agent. How many distinct non-terminal states are there?
ii. Draw a search tree out to a depth of 2 moves, including repeated states. Circle repeated states.

Problem 6

Write down first order logic representations of the following English sentences.

(i) Some men are not white.
(ii) No student attends every lecture.

(iii) Smart students get jobs.
(iv) All basketball players are tall.

Problem 7

Directions: To obtain full credit, be sure to *show all your work, and justify your answers.* If necessary, you may attach extra sheets. Make sure your name is printed on all of these.

P1. [Propositional logic]

Consider three blocks A, B and C which can be stacked on top of each other, or on a table, for instance, in configurations like the following:

In this problem, we do not move the blocks around, but rather consider a *fixed* configuration of the blocks. In such a configuration, let $S_{A,B}$ be a proposition symbol representing the fact that A is stacked above B, and similarly define $S_{B,A}$, $S_{A,C}$, $S_{C,A}$, $S_{B,C}$ and $S_{C,B}$. For instance, in the figure on the left, $S_{C,A}$ would be the only one of these symbols that is true. In the figure on the right, the only true symbols are $S_{A,B}$, $S_{B,C}$ and $S_{A,C}$.

For parts (a-d) below, be sure to *explicitly* list *all* of the required clauses or sentences. Do not just give examples of a general pattern.

(a) Show how to represent using propositional logic the fact that if one block is stacked above another, then the second cannot be above the first (for instance, if A is above B, then B cannot be above A).

(b) Show how to represent the fact that if one block is stacked above a second block, which is in turn stacked above a third block, then the first block must be stacked above the third block (for instance, if A is above B, and B is above C, then A must be above C).

(c) Show how to represent the proposition that at least one block must have no blocks stacked above it.